Algebra and Business Math Tutor

Table of Contents

Introduction	2
Structured Thinking	2
Thinking Mathematically	7
Equations	10
Algebraic Expressions	12
Fractions	13
Organizing Equation Terms with Parenthesis	15
Positive and Negative Results	16
• Multiplication	17
• Division	17
• Addition	18
• Subtraction	18
Exponents and Radicals	19
• Negative Exponent	19
• Fractional Exponent	20
Interpreting Scientific Notation	21
Solving Simultaneous Equations	23
Solving Word Problems	25
Business Math	29
• Working with Percentages	29
• Determining Averages	30
• Adding Sales Tax	33
• Calculating a Commission	33
• Calculating a Bonus	34
• Profit Margins and Discounts	35
• Word Problems Solutions Detail	37
References	39

© Michael Steven David 2003

Introduction

Mathematics is the universal language. Carl Sagan used it as the communication medium utilized by the aliens in his book “Contact.”

Mastery of math has eluded many leaving them lacking the basic skills needed to function to their potential in the business and life. Although it is not intended to substitute for a Mathematics course, this tutor is offered to assist expressing and dealing with the mathematical aspects of Excel.

Structured Thinking

The world is comprised of many things that interact to create the landscape where we live. The forces that tie these things together have relationships that affect the conditions of our environment.

Since the beginning of recorded time, humankind has defined the world in terms of numbers such as:

- When will the sun rise?
- When will the sun set?
- When should we plant the crop?
- How much should we plant?
- When do the season's change?
- When should we harvest?
- How much should we water the crop?
- How much food do we have?
- How far is it to the New World?
- How long will it take to get there?
- How much cargo can we carry?
- How many passengers and crew are there?
- How much corn can we carry to market?
- What can we get for the corn?
- How much money to we need to sustain the farm?
- Will we make enough money this year to survive?

Everyday must be met with the challenge of how much we have to do and how far we have to go to do it. The more we are familiar with our playing field, the better we can deal with it.

Mathematics can help define the boundaries of our experience so we can better confront daily obstacles. One must examine a situation with a particular way of thinking to effectively use math as a tool in this endeavor. This mindset, called **Structured Thinking**, clarifies available information by organizing it so the magnitude of the elements and their relationships can be clearly seen and better understood.

© Michael Steven David 2003

Structured Thinking breaks down a situation, or problem, into its components to assist reaching a usable and defendable conclusion. The steps in this process are as follows:

1. Define the objective.
2. Dissect the objective into its components.
3. Express the components numerically.
4. Define the component logical relationships.
5. Consolidate the relationships into the desired results.

An example of this is determining what it takes to prepare dinner. This situation would be briefly approached as follows:

Step 1

The desired objective here is to provide dinner for the family on time with minimal leftovers.

Step 2

The following factors are dinner components:

- Number of attendees
- Entrée
- Beverage
- Side Dishes
- Dessert
- Time meal will be served
- Preparation time
- Available preparation time
- Shopping required

© Michael Steven David 2003

Step 3

Dinner Element	Numerical Definition		
Attendees	• Mom • Dad • Teenage son • Teenage daughter Total of 4		
Entrée: Beef Stroganoff	Recipe:		
	Qty	**Measure**	**Ingredient**
	10	oz	Sliced mushrooms
	3	ea	Medium onions, diced
	2	lbs	Sirloin steak, cut into 1-inch strips
	1	cup	Red or white wine
	24	oz	Beef stock
	2	pt	Sour cream
	2	tbls	Worcestershire
	Other Ingredients		**Purpose**
	Parsley		Garnish
	Butter olive oil		Frying
	Flour		Dredging
	Salt and pepper		Season to taste
	Other Factors		**Amount**
Food Network: by Dimitri Criona Show: Calling All Cooks Episode: Beef Stroganoff and Cinnamon Rolls	Prep time		20 minutes
	Cooking time		55 minutes
	Yield		8 to 10 servings
Side Dish: Tri colored Vegetable Salad with Mustard Vinaigrette	Recipe: Mustard Vinaigrette		
	Qty	**Measure**	**Ingredient**
	1	ea	Clove minced garlic
	1	ea	Minced shallot
	1	tbls	Dijon mustard
	4	tbls	Red wine vinegar
	3	tbls	Olive oil
	Other Ingredients		**Purpose**
	Course salt		Season to taste
	Cracked black pepper		Season to taste
	Recipe: Tri colored Vegetable Salad		
	1	lbs	Green beans, ends trimmed, blanched to al dente
	4	ea	Large carrots, peeled and shredded
	4	ea	Small beets, peeled and shredded
	Other Factors		**Amount**
Food Network: by Kathleen Daelemans Show: Cooking Thin Episode: Block Party	Prep time		20 minutes
	Cooking time		5 minutes
	Yield		8 to 10 servings

Table 1
Step 3 – Component Numerical Expressions

© Michael Steven David 2003

Step 3 *Continued*

Dinner Element	Numerical Definition		
Dessert: Peach Cobbler	Recipe: Filling		
	Qty	**Measure**	**Ingredient**
	4	cups	Peeled and sliced fresh peaches (blanch in boiling water for 30 seconds to remove the skins)
	1	tsp	Cinnamon
	1	tsp	Vanilla
	1	tbls	Flour
	3/4	cup	Brown sugar
	Recipe: Crust		
	Qty	**Measure**	**Ingredient**
	1	cup	Flour
	1	tsp	Baking powder
	1/2	tsp	Baking soda
	3	tbls	Brown sugar
	4	tbls	Unsalted butter, cut into small pieces
	2/3	cup	Buttermilk
	Recipe: Topping		
	1	tbls	Brown sugar
	1/2	cup	Whipped cream
	Other Factors		**Amount**
Food Network: by Kristina Williamson, Schooner Ellida Show: Food Network Specials	Prep time		20 minutes
	Cooking time		30 minutes
	Yield		6 to 8 servings
Beverage: Raspberry Lemonade	Recipe:		
	Qty	**Measure**	**Ingredient**
	3/4	cup	Fresh or thawed frozen raspberries
	9	cups	Water
	2	cups	Freshly squeezed lemon juice (about 12 lemons)
	2	cups	Superfine sugar
	Other Factors		**Amount**
"American Brasserie" by Gale Gand, Rick Tramonto, Julia Moskin, MacMillian Inc, 1997	Prep time		5 minutes
	Yield		6 to 8 servings

Table 2
Step 3 – Component Numerical Expressions

Meal Preparation Time Factors:

Dinner is usually served at 6:30 PM
Mom & Dad get home from work between 4:30 and 5:00 PM

Shopping Requirements:

All ingredients, except meat and produce, are available in the kitchen inventory.

© Michael Steven David 2003

Step 4

Recipes Adjustments:

4 servings desired for minimal leftovers.

Recipe	Servings Yield	Adjustment
Entrée: Beef Stroganoff	8 to 10	1/2
Side Dish: Mustard Vinaigrette	8 to 10	1/2
Side Dish: Tri colored Vegetable Salad	8 to 10	1/2
Dessert: Peach Cobbler	6 to 8	None
Beverage: Raspberry Lemonade	6 to 8	None

Table 3
Step 4 – Recipe Yield Adjustments

Available Preparation Time:

Assuming Mom and Dad arrive late; meal preparation will begin at 5:00 PM.

Step 5

Shopping List:

Course	Ingredient	Qty	Measure
Entrée	Sirloin Steak	1	lbs
	Medium onions	1 1/2	ea
	Mushrooms	5	oz
	Parsley	1	bunch
Side Dish	Garlic	1	ea
	Shallot	1	ea
	Green beans	1/2	lbs
	Large carrots	2	ea
	Small Beets	2	ea
Dessert	Fresh peaches	24	ea
Beverage	Fresh lemons	12	ea

Table 4
Step 5 – Adjusted Ingredients Shopping List

Dad will leave work early to shop so he can be home by 5:00 PM.

Preparation Timetable:

Available preparation is 1½ hours based on Mom and Dad's late arrival of 5:00 PM and serving time of 6:30 PM.

Course	Prep Minutes	Cook Minutes	Chef	Start Time	Finish Time
Entrée	20	55	Mom	5:00	6:15
Side Dish	20	5	Mom	5:20	5:45
Dessert	20	30	Dad	5:00	5:50
Beverage	5	0	Dad	5:20	5:25

Table 5
Step 5 – Meal Preparation and Cooking Schedule

© Michael Steven David 2003

Although the **Entrée** takes the longest to prepare and cook, it will be ready at 6:15 which is 15 minutes before serving time.

Results:

Dinner will be served on time with only dessert and beverage leftovers for seconds.

Thinking Mathematically

The first three **Structured Thinking** steps simply define the facts of the situation. The last two steps involve a logical leap from the components to the conclusion. This is the bridge between the facts and results that is built by mathematics, which is the tool kit and **Thinking Mathematically** is the design process that builds this bridge.

The mechanics of this process uses numbers to logically relate factors with one or more of the following four basic arithmetic operations:

Operation	Math Symbol
Addition	+
Subtraction	−
Multiplication	×
Division	÷

Table 6
Math Operations and Symbols

Higher math uses additional techniques, but any basic math process is achieved with these four operations.

This is demonstrated by the **Family Dinner Example** from the previous section. Once the objective is defined and the components are represented numerically, the mathematical relationships between the component values and the desired results must be expressed to produce the desired results.

Mathematical Thinking achieves this by structuring the problem with mathematical operations that consider the logical relationships that express the size of component values against a goal. This is done as follows:

Objective: Minimize Leftovers

Mathematical Thought Process

1. 4 servings needed.
2. Yield of all recipes is higher than 4.
3. Divide 4 into each recipe yield, to adjust the proportion of needed ingredients.
4. Any ingredient measured as each (i.e. shallot, onion, garlic clove, beet) will be rounded up to a whole unit for shopping.
5. Dessert and beverage recipes do not need yield adjustments since leftovers are desired for anticipated seconds.

© Michael Steven David 2003

Application of Math Operators:

The **Mathematical Thinking** here first considers whether more or less yield is needed. Since the **Desired Yield** is less than the **Current Yield**, the proportion is determined by **dividing** the desired by the current.

Course	Current Yield	Math Operator	Calculation	Adjustment Math Logic
Entrée	8	Division	4 ÷ 8 = ½	4 is ½ of 8
Side Dish	8	Division	4 ÷ 8 = ½	4 is ½ of 8

Table 7
Division Application to Recipe Yield Adjustment

The **Mathematical Thinking** determined that the **Desired Yield** is **½** of the **Current Yield**. So an adjustment to determine the proper ingredient quantities is made by **multiplying** each affected ingredient by **½** as follows:

Entrée: Beef Stroganoff

Ingredient	Qty	Measure	Calculation	Adjusted Qty
Sliced mushrooms	10	oz	½ x 10	5
Medium onions, diced	3	ea	½ x 3	1½
Sirloin steak, cut into 1-inch strips	2	lbs	½ x 2	1
Red or white wine	1	cup	½ x 1	½
Beef stock	24	oz	½ x 24	12
Sour cream	2	pt	½ x 2	1
Worcestershire	2	tbls	½ x 2	1

Table 8
Multiplication Application to Entrée Recipe Ingredients Adjustment

Side Dish: Mustard Vinaigrette

Ingredient	Qty	Measure	Measure	Adjusted Qty
Clove minced garlic	1	ea	½ x 1	½
Minced shallot	1	ea	½ x 1	½
Dijon mustard	1	tbls	½ x 1	½
Red wine vinegar	4	tbls	½ x 4	2
Olive oil	3	tbls	½ x 3	1½

Table 9
Multiplication Application to Side Dish Recipe Ingredients Adjustment

Side Dish: Tri colored Vegetable Salad

Ingredient	Qty	Measure	Measure	Adjusted Qty
Green beans	1	lbs	½ x 1	½
Large carrots	4	ea	½ x 4	2
Small beets	4	ea	½ x 4	2

Table 10
Multiplication Application to Side Dish Recipe Ingredients Adjustment

© Michael Steven David 2003

Objective: Serve Dinner at 6:30 PM

Mathematical Thought Process

1. Mom and Dad will most likely be home no later than 5:00 PM.
2. Courses of the meal can be prepared while others are cooking.
3. Mom and Dad will prepare different courses with each doing one of the two longest courses.
4. Mom and Dad will work simultaneously so dinner will be ready when the one that takes the longest is finished.
5. Since a chef is not occupied while a course is cooking, another course can begin preparation when the previous course has begun cooking.
6. Total time for a chef to complete a course will be the longer duration of either the preparation and cooking time for their longest course or the preparation time for their longest course plus the preparation and cooking time for their next course.

   The **Gantt Chart** in Figure 1 below shows the timing relationships of the meal courses.

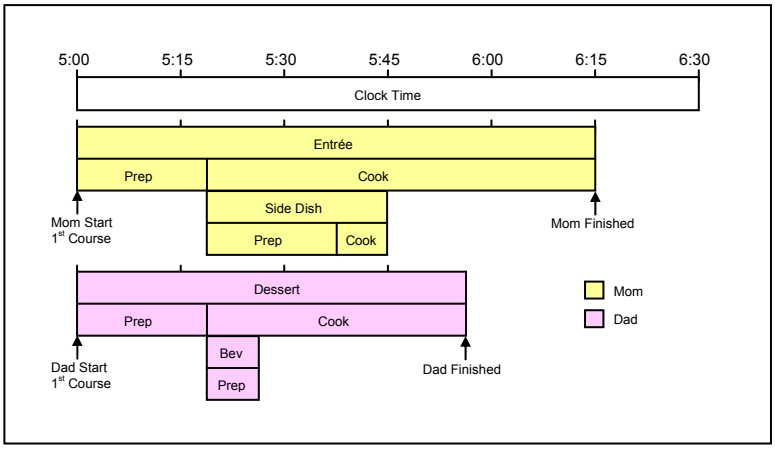

Figure 1
Meal Preparation and Cooking Time Gantt Chart

Application of Math Operators:

Mom's Preparation and Cook Time

The **Mathematical Thinking** here, and for **Dad**, knows that the cooking of a course occurs after preparation and not during. So the **Total Time** to complete a course will be the **addition** of preparation and cooking time.

Course	Prep Minutes	Cook Minutes	Calculation	Total Time
Entrée	20	55	20 + 55 = 75 min	75 min
Side Dish	20	5	20 + 5 = 25 min	25 min

Table 11
Addition Application to Mom's Time

© Michael Steven David 2003

Mom's Total Time is **1¼ hours** (or 75 minutes) since the **Side Dish** is completed before the **Entrée**.

Dad's Preparation and Cook Time

Course	Prep Minutes	Cook Minutes	Calculation	Total Time
Dessert	20	30	20 + 30 = 50 min	50 min
Beverage	5	0	0 + 5 = 5 min	5 min

Table 12
Addition Application to Dad's Time

Dad's Total Time is **50 minutes** since the **Side Dish** is completed before the **Entrée**.

Meal Serving on Time

Since **Mom** and **Dad** started preparation at the same time, the meal is ready when the one with the **longest completion time** is finished. This involves a comparison of the times which is sorting. Since Mom's time is longer than Dad's, the time to complete the meal is **1¼ hours**.

The **Mathematical Thinking** here considers whether this time is more or less than the time available. First the time available for preparation and cooking can be determined by **subtracting** Mom and Dad's arrival time, which is when they start preparing the meal, from the dinner serving time.

Mom and Dad's Arrival Time = 5:00 PM

Dinner Serving Time = 6:30 PM

Time Available = 6:30 – 5:00 = **1½ hours**

Meal preparation and cooking time, **1¼ hours**, is less than the time available, **1½ hours**. So the excess time, which can be used to set the table and serving, can be determined by **subtracting** the completion time from the time available.

Equations

Math relationships are expressed in a structure called equations which represent the relationships among the factors. This arrangement groups the factors with mathematical operations and equates them to a desired result as follows:

4 **Added** to 7 = 4 **+** 7

10 **Divided** by 2 = 10 **÷** 2

6 **Multiplied** by 8 = 6 **×** 8

10 **Subtracted** from 27 = 27 **−** 10

© Michael Steven David 2003

Completion of the math operations allows these equations to be expressed as follows:

$4 + 7 = \mathbf{11}$ $\qquad$ $10 \div 2 = \mathbf{5}$

$6 \times 8 = \mathbf{48}$ $\qquad$ $27 - 10 = \mathbf{17}$

The **math operation symbols** (+, ÷, ×, and −), which join equation elements, are **abbreviations** that replace cumbersome verbiage.

The above equations contain only math symbols and values, known as **Constants,** which don't change. Every time the math operations are executed in equations that only have **Constants**, the same result occurs.

Equations are made flexible when they are stated with elements, known as **Variables,** which can be any assigned value. **Variables** are expressed as **letters**, from any alphabet, like in the following equations:

$b = d + n$ $\qquad$ $r = y \div t$

$m = c \times y$ $\qquad$ $k = s - b$

The use of **Variables** in an equation allows the results to change even though the mathematical relationships between values are fixed. Any constant can be substituted for the defined variables in an equation before the mathematical operations are applied to determine a solution as shown in Table 13 below.

Equation	Variable Definitions		Variable Substitutions	Equation Solution
b = d + n	d = 8	n = 2	b = 8 + 2	b = 10
	d = 6	n = 8	b = 6 + 8	b = 14
	d = 9	n = 3	b = 9 + 3	b = 12
r = y ÷ t	y = 6	t = 2	r = 6 ÷ 2	r = 3
	y = 4	t = 4	r = 4 ÷ 4	r = 1
	y = 9	t = 3	r = 9 ÷ 3	r = 3
m = c × f	c = 5	f = 3	m = 5 × 3	m = 15
	c = 8	f = 6	m = 8 × 6	m = 48
	c = 7	f = 9	m = 7 × 9	m = 63
k = s − b	s = 6	b = 1	k = 6 − 1	k = 5
	s = 4	b = 2	k = 4 − 2	k = 2
	s = 8	b = 5	k = 8 − 5	k = 3

Table 13
Equation Variable Definition and Solution

Although the solutions might be the same, as with the equation for **r** above, the results are dictated by the variables.

© Michael Steven David 2003

Algebraic Expressions

Equations express the relationships of numerical components. Each expression is comprised of **terms** which are the components that are not math symbols. The type of math structure an **Algebraic Expression** represents is based on the number of terms it contains as shown in Table 14 below.

Expression Type	Number of Terms	Example
Monomial	1	4ja
Binomial	2	7a + 16cp
Trinomial	3	3 + 7brs – 22md
Polynomial	2 or more	5ey – 9nkz + 3t + 7cmx

Table 14
Algebraic Expression Types

Multiplication is the math operation always implied when **Variables** and **Constants** appear in an **Algebraic Expression** without a math operation symbol between them. The math operations required by the expressions in Table 14 above are shown in Table 15 below.

Expression	Math Operations
4ja	4 × j × a
16cp	16 × c × p
7brs	7 × b × r × s
9nkz	9 × n × k × z

Table 15
Implied Multiplication Algebraic Expressions

The math relationship between expressions in a multiple term (polynomial) equation is clear when the terms are separated by the math operations **addition** (+) or **subtraction** (−). In other words **add** or **subtract** the terms from each other. To help segment the math process, terms that are multiplied or divided by each other are organized with **fractions** and **parenthesis** in an equation to assure the proper math operation is performed on each term.

© Michael Steven David 2003

Fractions

A **fraction** is comprised of an upper, known as the **numerator**, and lower part, known as the **denominator**. It is expressed in the following form:

$$\frac{\textbf{Numerator}}{\textbf{Denominator}}$$

The **Denominator** is always divided into the **Numerator** as shown in Tables 16 and 17 below.

Fraction	Calculation	Resulting Value
$\frac{2}{4}$	2 ÷ 4	$\frac{1}{2}$
$\frac{4}{2}$	4 ÷ 2	2
$\frac{3}{6}$	3 ÷ 6	$\frac{1}{2}$
$\frac{6}{3}$	6 ÷ 3	2
$\frac{2}{6}$	2 ÷ 6	$\frac{1}{3}$
$\frac{3}{15}$	3 ÷ 15	$\frac{1}{3}$
$\frac{15}{3}$	15 ÷ 3	5
$\frac{100}{20}$	100 ÷ 20	5
$\frac{175}{25}$	175 ÷ 25	7

Table 16
Fraction Numerator and Denominator Math Relationship

Fraction components can be any **Algebraic Expression**. Although they are part of a **fraction**, all math operations in an **Algebraic Expression** must be completed before the **Denominator** can be **divided** into the **Numerator** as shown in Table 17 below.

Fraction	Calculation		Resulting Value
$\frac{2+6+8}{4+3-1}$	Numerator:	2 + 6 + 8	16
	Denominator:	4 + 3 – 1	6
	Fraction:	16 ÷ 2	8
$\frac{10+8-6}{9-7+10}$	Numerator:	10 + 8 + 6	12
	Denominator:	9 – 7 + 10	12
	Fraction:	12 ÷ 12	1
$\frac{10-2+6}{20-7-6}$	Numerator:	10 – 2 + 6	14
	Denominator:	20 – 7 – 6	7
	Fraction:	14 ÷ 7	2

Table 17
Algebraic Expressions in Fractions

© Michael Steven David 2003

The same relationships and protocols apply when a fraction component is an **Algebraic Expression** that contains **variables** as shown in Table 18 below.

Fraction	Calculation	Resulting Value
$\frac{2af}{4rp + 6xc}$	Numerator: Variable Definitions: a = 4; f = 145 Variable Substitutions: 2 × 4 × 145	1160
	Denominator: Variable Definitions: r=2; p=10; x=5; c=7 Variable Substitutions: 4 × 2 × 10 + 6 × 5 × 7 or 80 + 210	290
	Fraction Solution: 1160 ÷ 290	4
$\frac{n + g - 3hm}{dy + jks}$	Numerator: Variable Definitions: n = 325; g = 150; h = 1; m =25 Variable Substitutions: 325 + 150 – 3 × 1 × 25 or 325 + 150 – 75	400
	Denominator: Variable Definitions: d = 4; y = 10; j = 4; k =5; s=2 Variable Substitutions: 4 × 10 + 4 × 5 × 2 or 40 + 40	80
	Fraction Solution: 400 ÷ 80	5

Table 18
Fraction Components with Algebraic Expressions Containing Variables

As shown above, the **Denominator** is again divided into the **Numerator** even when either are themselves fractions as shown below.

$$\frac{\frac{300}{25}}{\frac{200}{100}} = \frac{300 \div 25}{200 \div 100} = \frac{6}{2} = 6 \div 2 = 3$$

© Michael Steven David 2003

Organizing Equation Terms with Parenthesis

Although a fraction clearly separates terms involved in division, complicated equations use **parenthesis** to organize equation elements so that the math operations are conducted in the proper sequence. For example, the following equation:

$$m = (5tz + 10rpx - \frac{(6ys - 4de)}{2a} + 8bf)(gk + 3wj - \frac{14}{(5vh - 8)})$$

The apparent complexity here is simplified with **Structured Thinking** which breaks the equation into its component operations. Once the variables are defined, the solution for each term is determined before the math relationships are applied as shown in Table 19 below.

Term	Variable Definitions	Variable Substitutions	Term Solution
5tz	t = 2 z = 3	5 × 2 × 3	30
10rpx	r = 1 p = 4 x = 5	10 × 1 × 4 × 5	200
$\frac{(6ys - 4de)}{2a}$	y = 9 s = 7 d = 4 e = 5 a = 2	Numerator: 6 × 9 × 7 – 4 × 4 × 5 or 432 – 80 = 352	88
		Denominator: 2 × 2 = 4	
		Fraction: 352 ÷ 4	
8bf	b = 7 f = 8	7 × 8	56
5tz + 10rpx – $\frac{(6ys - 4de)}{2a}$ + 8bf = 30 + 200 – 88 + 56			198
gk	g = 6 k = 3	6 × 3	18
3wj	w = 2 j = 8	3 × 2 × 8	48
$\frac{14}{(5vh - 8)}$	v = 3 h = 1	Numerator: 14	2
		Denominator: 5 × 3 × 1 – 8 = 7	
gk + 3wj – $\frac{14}{(5vh - 8)}$ = 18 + 48 – 2			64
5tz + 10rpx – $\frac{(6ys - 4de)}{2a}$ + 8bf)(gk + 3wj – $\frac{14}{(5vh - 8)}$) = 198 × 64			12,672

Table 19
Fraction Components with Algebraic Expressions Containing Variables

The parentheses define the following two large terms (polynomials):

$$(5tz + 10rpx - \frac{(6ys - 4de)}{2a} + 8bf) \text{ and } (gk + 3wy - \frac{14}{(5vh - 8)})$$

that are multiplied by each other. Without the parentheses the equation would be

$$m = 5tz + 10rpx - \frac{(6ys - 4de)}{2a} + 8bfgk + 3wy - \frac{14}{(5vh - 8)}$$

© Michael Steven David 2003

which equals **1,300** instead of **12,672**.

Try These!

Practice the above by solving the equations in Table 20 below.

Equation Number	Equation	Solution
1	a = (23 + 57)(32 + 91 – 83)	a = 3,200
2	$t = (45 + \frac{320}{(120 - 40)})(125 - \frac{525}{150 - 125})$	t = 5,096
3	$m = (\frac{(9ka + 3trh)}{(wsv - nyze - 24)} + 18)$ Variable Definitions: k = 3 a = 5 t = 6 r = 4 h = 7 w = 8 s = 5 v = 9 n = 4 y = 8 z = 9 e = 1	m = 231
4	$b = (18c + \frac{(9ka + 3trh)}{(wsv - nyze - 24)})(10gm - 5xvd + 100)$ Variable Definitions: c = 2 k = 3 a = 5 t = 6 r = 4 h = 7 w = 8 s = 5 v = 9 n = 4 y = 8 z = 9 e = 1 g = 9 m = 6 x = 3 v = 6 d = 7	b = 2,490

Table 20
Practice Equations

Positive and Negative Results

Both **positive** and **negative** numbers occur frequently in mathematical operations. To properly deal with them it is useful to understand their relationship to zero. The scale in Figure 21 below shows this relationship:

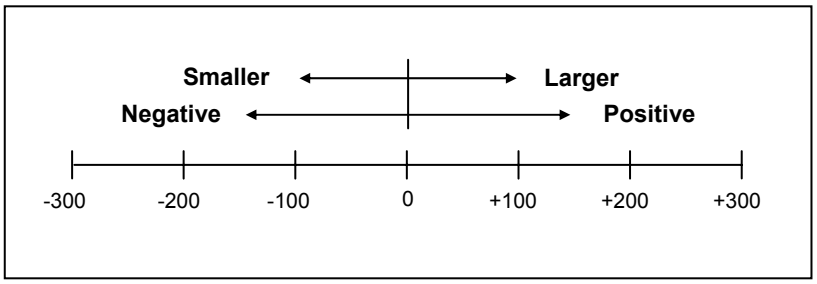

Figure 21
Practice Equations

Note that the **higher** the **numerical value** (the number without the sign) of a **positive number**, the **larger** the number. But, conversely **higher** the **numerical value** of a **negative** number, the **smaller** the number.

This number size relationship is shown in Table 22 on the next page.

© Michael Steven David 2003

Value 1	Value 2	Larger Value
+23	+56	+56
–104	+104	+104
–341	–557	–341
–62	–28	–28

Table 22
Value Size Comparisons

The **positive** or **negative** nature, known as the **plus** (+) or **minus** (–) sign, of a value resulting from a mathematical operation depends on the **positive** or **negative** values of numbers involved and the mathematical operation. The following rules define the sign of the results associated with the particular mathematical operations:

Multiplication:

The basic rules of thumb here are as follows:

- **Like signs** multiplied by each other always result in a **positive** number.
- **Opposite signs** multiplied by each other always result in a **negative** number.

The examples in Table 23 below demonstrate this concept.

Value 1	Math Operation	Value 2	Results
Positive	Multiplied by	Positive	Positive
+58	×	+10	+580
Negative	Multiplied by	Negative	Positive
–120	×	–12	+1,440
Negative	Multiplied by	Positive	Negative
–50	×	+100	–5,000

Table 23
Multiplication Results of Positive and Negative Numbers

Division:

The rules here are essentially the same as those for **Multiplication** with one minor change as shown in the following:

- **Like signs** divided by each other always result in a **positive** number.
- **Opposite signs** divided by each other always result in a **negative** number.

The examples in Table 24 on the next page demonstrate this concept.

Value 1	Math Operation	Value 2	Results

© Michael Steven David 2003

Positive	Divided by	Positive	Positive
+48	÷	+4	+12
Negative	Divided by	Negative	Positive
–220	÷	–11	+20
Negative	Divided by	Positive	Negative
–144	×	+12	–12

Table 24
Multiplication Results of Positive and Negative Numbers

Addition:

The rule that states the lack of a mathematical symbol between algebraic terms implies **multiplication**, page 11, also applies when **plus** (+) and **minus** (–) signs are adjacent to each in an **Algebraic Expression**. The multiplication rule for signs also applies to the resulting sign.

This means that **adding** a **negative number** to any term becomes **Subtraction** since the **two adjacent opposite signs multiply** to become a **negative sign**. Examples of this are shown in Table 25 below.

Original Equation	Ultimate Equation	Result
p = 27 + (–12)	p = 27 – 12	p = 15
n = 231 + (–143)	n = 231 – 143	n = 88
s = –138 + (–11)	s = –138 – 11	s = –149

Table 25
Adding Negative Numbers Examples

Subtraction:

The interaction of the signs are the same here as with **Addition**. **Subtracting** a **negative number** from any term becomes **Addition** since the **two adjacent like signs multiply** to become a **positive sign**. Examples of this are shown in Table 26 below.

Original Equation	Ultimate Equation	Result
c = 13 – (–10)	c = 13 + 10	c = 23
f = 59 – (–17)	f = 59 + 17	f = 76
z = –186 – (–151)	z = –186 + 151	z = –35

Table 26
Subtracting Negative Numbers Examples

Note that the lack of a sign in front of a number implies that number is positive.

57 – 24 = 23 is the same as +57 – 24 = +23

© Michael Steven David 2003

Try These!

Practice the above by solving the equations in Table 27 below.

Equation Number	Equation	Solution
1	h = (39 – 25 + (– 28) – (– 82)) – (– 111 + (– 32) – (– 51)	h = –24
2	j = (12 – (–10))(–56 + (–31) – (–91)) + (– 73 – (–112))	j = 127
3	k = (15 + (–28))(–11 + (–18) + (–3)) + (– 22 + (–141))	k = 253
4	$b = (-28 + \frac{(15-(-39))}{(98-(-193+161)(-3)}))(61-(+9)+136-\frac{(159-(-39)+(-98))}{((117-(4)(27)-8)})$	b = –88

Table 27
Positive and Negative Results Practice Exercises

Exponents and Radicals

An abbreviated notation is used when **multiplying a number by itself**. This notation changes the expression

$$5 \times 5 = 25 \text{ to } 5^2 = 25.$$

This is known as raising a number to a **power**. In this case it is **5** to a **power** of **2**. The **power number** is known as the number's **Exponent**.

An **Exponent** designates how many times a number is **multiplied** by itself. Table 28 below demonstrates the how this is applied.

Power Notation	Exponent	Expanded Expression
4^2	2	4 × 4
9^3	3	9 × 9 × 9
7^4	4	7 × 7 × 7 × 7
6^5	5	6 × 6 × 6 × 6 × 6

Table 28
Exponent Examples

A **Negative Exponent** means the stated value is taken to the **Power** in the denominator of a fraction. The numerator of the fraction is one and is known as a **Reciprocal**. This is demonstrated in Table 29 below.

Power Notation	Exponent	Expanded Expression
9^{-2}	–2	$\frac{1}{9 \times 9}$
5^{-3}	–3	$\frac{1}{5 \times 5 \times 5}$
2^{-4}	–4	$\frac{1}{2 \times 2 \times 2 \times 2}$
3^{-5}	–5	$\frac{1}{3 \times 3 \times 3 \times 3 \times 3}$

Table 29
Negative Exponent Examples

© Michael Steven David 2003

A **Fractional Exponent** indicates the number is a **root** which is the value resulting from multiplying a number by itself a specified number of times. The **exponent denominator** designates the **Root Index** which is the times the number is multiplied by itself to get the root.

The expanded expression of this notation puts the root under a **radical** like the one shown to the right and in Table 30 below. Now index implies an index of 2. $\sqrt{\text{Root}}$

Power Notation	Exponent	Expanded Expression	Numerical Result
$16^{1/2}$	½	$\sqrt{16}$	4
$27^{1/3}$	⅓	$\sqrt[3]{27}$	3
$625^{1/4}$	¼	$\sqrt[4]{625}$	5
$256^{1/8}$	⅛	$\sqrt[8]{256}$	2

Table 30
Fractional Exponent Examples

> Taking the root of a number is a **form of division** since the resulting value is the number that results when it is multiplied by itself more than once to get the root value.

The **exponent numerator** is the power (or exponent) of **root number** inside the radical as shown in Table 31 below.

Power Notation	Exponent	Expanded Expression	Numerical Result
$729^{2/3}$	⅔	$\sqrt[3]{(729)^2}$	81
$256^{3/8}$	⅜	$\sqrt[8]{(256)^3}$	8
$1296^{3/4}$	¾	$\sqrt[4]{(1296)^3}$	216
⅝	⅝	$\sqrt[8]{(256)^5}$	32

Table 31
Fractional Exponent Examples

> When the **numerator** of a fractional exponent is **equal to 1**, the root number inside the radical has **no power** (or exponent).

Anything, variable or number, having an **Exponent** of **zero** is equal to **1** as shown in Table 32 below.

Power Notation	Exponent	Numerical Result
4^0	0	1
5^0	0	1
a^0	0	1
X^0	0	1

Table 32
Zero Exponent Examples

© Michael Steven David 2003

Interpreting Scientific Notation

Mathematics uses notation to abbreviate the size of equations and numbers so they can be more easily managed. The notation used to truncate large and small numbers is known as **Scientific Notation**. This system is based on the **powers of 10**. Instead of writing down all the zeros to right or left of the decimal point, a number is expressed as its significant digits with one place to left of the decimal point times 10 to the appropriate power.

Table 33 below shows examples of **Scientific Notation** expressions for some numbers greater than one.

Number	Number Reduced to One Decimal Place	Number in Scientific Notation
37	3.7 × 10	3.7×10^{1}
491	4.91 x 100	4.91×10^{2}
3,867	3.867 x 1000	3.867×10^{3}
5,617,492	5.617492 x 1000000	5.617492×10^{6}

Table 33
Scientific Notation for Numbers Greater Than One

> The **Scientific Notation** exponent of 10 is equal to the **number of zeros** to **right of 1** in the value multiplied by the significant digits.

Since a **negative exponent** means the stated value is in the denominator of a fraction, as noted on page 18, using a **negative power** for the 10 in **Scientific Notation** represents numbers that are smaller than one and greater than zero.

Table 34 shows examples of **Scientific Notation** expressions for some numbers greater than one.

Number	Number Reduced to One Decimal Place	Number in Scientific Notation
.20	2.0 × .1	2.0×10^{-1}
.0628	6.28 x .01	6.28×10^{-2}
.007193	7.193 x .001	7.193×10^{-3}
.000002943	2.934 x .000001	2.943×10^{-6}

Table 34
Scientific Notation for Numbers Greater Than Zero and Less Than One

> The **Scientific Notation** negative exponent of 10 is equal to **one + the number of zeros** to **right of the decimal point** in the value multiplied by the significant digits.

© Michael Steven David 2003

Excel expresses **Scientific Notation** differently, as shown in Table 35 below, to accommodate the restrictions of cell formatting.

Number in Scientific Notation	Excel Notation
4.91×10^{2}	4.91E+02
3.867×10^{3}	3.87E+03
7.193×10^{-3}	7.19E-03
2.943×10^{-6}	2.943E-06

Table 35
Scientific Notation for Numbers Greater Than Zero and Less Than One

Table 36 below shows how familiar things in our natural environment are expressed in **Scientific Notation**.

Item Description	Number in Scientific Notation
Grains of Sand on the Earth	10^{20}
Mass of the Earth in Grams	6×10^{27}
Living Things on the Earth	10^{29}
Atoms in All the Life on Earth	10^{41}
Number of Elementary Particles (electrons, protons & neutrons) in the Entire Universe	10^{80}
Estimated Number of Neutrons That Would Fill the Entire Known Universe	10^{189}
A Googol (Very Large Number)	10^{100}
A Googolplex (Very Very Very Large Number)	$(\text{Googol})^{100}$

Table 36
Natural Environment Expressed in Scientific Notation

Table 37 shows the immense size of numbers that are expressed in **Scientific Notation**.

Name	Number Written Out	Number in Scientific Notation	Time to Count to This Number Day & Night From 0 at One Count per Second
One	1	10^{0}	1 Second
Thousand	1,000	10^{3}	17 Minutes
Million	1,000,000	10^{6}	12 Days
Billion	1,000,000,000	10^{9}	32 Years
Trillion	1,000,000,000,000	10^{12}	32,000 Years[1]
Quadrillion	1,000,000,000,000,000	10^{15}	32 Million Years[2]
Quintillion	1,000,000,000,000,000,000	10^{18}	32 Billion Years[3]
Sextillion	1,000,000,000,000,000,000,000	10^{21}	32 Trillion Years
Septillion	1,000,000,000,000,000,000,000,000	10^{24}	32 Quadrillion Years
Octillion	1,000,000,000,000,000,000,000,000,000	10^{27}	32 Quintillion Years
Nonillion	1,000,000,000,000,000,000,000,000,000,000	10^{30}	32 Sextillion Years
Decillion	1,000,000,000,000,000,000,000,000,000,000,000	10^{33}	32 Septillion Years

Table 37
Immense Numbers Expressed in Scientific Notation

1. Longer than civilization has been on Earth
2. Longer than humans have been on Earth
3. Twice the age of the Universe

© Michael Steven David 2003

Solving Simultaneous Equations

When an equation has **more that one variable**, as noted in **Algebraic Expressions** on page 11, an algebraic solution for the variables can only be achieved if the variables are expressed in one or more other equations. Since these equations have the same variables, they are known as **Simultaneous Equations**.

There must be as many **Simultaneous Equations** as there variables in the equations to be able to determine the variable values algebraically. The easiest and least cumbersome method of solving **Simultaneous Equations** is known as **Substitution**.

This is done by expressing one variable in terms of the other in one equation and substituting it into the other equation leaving it with only one variable which can be determined.

The following example shows the solution for two **Simultaneous Equations**:

$$4a + 6b = 24$$

$$a - b = 1$$

The following **Algebraic Rules** for equations apply:

Rule 1: Isolate the variable targeted for solution on one side of the equation.

Rule 2: Equation equality is maintained when identical things are done to both sides of the equation.

Solution Step 1

Define the **variable a** in terms of **variable b** using the 2nd equation.

$$a - b = 1$$

Add b to **both sides** of the equation as follows:

$$b + a - b = 1 + b$$

$$a = 1 + b$$

Solution Step 2

Substitute the definition of the **variable a** from the 2nd equation into the 1st equation.

$$4a + 6b = 24$$

$$4(1 + b) + 6b = 24$$

$$4 + 4b + 6b = 24$$

$$4 + 10b = 24$$

© Michael Steven David 2003

Solution Step 3

Solve the 1st equation for the **variable b** as follows:

- Subtract 4 from both sides

$$4 + 10b = 24$$

$$-4 + 4 + 10b = 24 - 4$$

$$10b = 20$$

- Divide both sides by 10

$$\frac{10b}{10} = \frac{20}{10}$$

$$\mathbf{b = 2}$$

Solution Step 4

Substitute the value for **variable b** in to the 2nd equation and **solve** for the value of **variable a**.

$$a = 1 + b$$

$$a = 1 + 2$$

$$\mathbf{a = 3}$$

Try These!

Practice the above by solving the **Simultaneous Equations** in Table 38 below.

Problem Number	Equation	Solution
1	$10x - y = 70$ $4x + 2y = 52$	$x = 8$ $y = 10$
2	$5c + 8e - 29 = 48$ $4c + e + 17 = 30$	$c = 1$ $e = 9$
3	$7\frac{r}{t} + 2r - 23 = 15$ $10r - 6t = 84$	$r = 12$ $t = 6$
4	$53 + 7k - 20w = 7$ $96 - 10w - 3k = 30$	$k = 2$ $w = 3$

Table 38
Simultaneous Equations Practice Exercises

© Michael Steven David 2003

Solving Word Problems

The confusion of **Word Problems** can be eliminated by applying the following **Structured Thinking** concepts which were covered on page 2:

1. Define the objective.
2. Dissect the objective into its components.
3. Express the components numerically.
4. Define the component logical relationships.
5. Consolidate the relationships into the desired results.

Although this process can be used to deal with any problem, the nature of **Word Problems** calls for it to be restated so that the problem dialogue and solution approach can be dissected.

The steps in this process, augmented for **Word Problems**, are as follows:

1. Read the problem and determine what needs to be solved.
2. Write the equation that defines the desired solution.
3. Define the value of each variable in the equation from the information in the problem statement.
4. Substitute the variable values into the equation.
5. Solve the equation.

An example application of this approach would be to solve the following classic **Word Problem**:

> Matthew left Washington, DC going 60 miles per hour and Lesley left Richmond, VA going 70 miles per hour at the same time on the same road, Interstate 95. If the distance between Washington and Richmond is 100 miles, how many miles from Richmond will they meet?

Step 1

The problem asks for the number miles from Richmond their meeting point will be.

Step 2

The equation that will solve this problem must be formulated with **Mathematical Thinking** and logic. Since they left at the same time and will meet at the same time, their travel times will be equal. Therefore the logical solution equation will be as follows:

Lesley's Travel Time = Matthew's Travel Time

© Michael Steven David 2003

The amount of time each will travel is determined by the following relationship:

$$\textbf{Travel Time} = \frac{\textbf{Distance}}{\textbf{Speed}}$$

Step 3

The variables in the equation are as follows:

D = Distance Leslie will travel

Since the total distance between Washington and Richmond is 100 miles, and they meet at the same point:

100 – D = Distance Matthew will travel

Their times on the road are as follows:

T_L **= Lesley's Travel Time**

T_M **= Matthew's Travel Time**

Their speeds are as follows:

S_L **= Lesley's Speed = 70 mph**

S_M **= Matthew's Speed = 60 mph**

Step 4

Substituting the information from **Step 3**, Lesley's travel time is defined as follows:

$$T_L = \frac{D}{S_L} = \frac{D}{70}$$

Substituting the information from **Step 3**, Matthew's travel time is defined as follows:

$$T_M = \frac{(100 - D)}{S_L} = \frac{(100 - D)}{60}$$

The following is true since their travel times are equal as declared in **Step 1**:

$$T_L = T_M$$

Therefore substituting the travel time definitions into this equation results in the following:

$$\frac{D}{70} = \frac{(100 - D)}{60}$$

© Michael Steven David 2003

Step 5

Solving the last equation shown in **Step 4** for the **variable D** will provide the desired problem solution. This is done in Table 39 below using the following **Algebraic Rules**:

Rule 1: Isolate the variable targeted for solution on one side of the equation.

Rule 2: Equation equality is maintained when identical things are done to both sides of the equation.

Equation: $$\frac{D}{70} = \frac{(100 - D)}{60}$$

Solution Step	Action	Purpose	Results
1	Multiply both sides of the equation by 70.	Remove the fraction denominator from the left side of the equation.	$\frac{D}{70} = \frac{(100 - D)}{60}$ $70 \times \frac{D}{70} = \frac{(100 - D)}{60} \times 70$ $\cancel{70} \times \frac{D}{\cancel{70}} = \frac{(100 - D)}{60} \times 70$ $D = 70 \times \frac{(100 - D)}{60}$
2	Multiply both sides of the equation by 60.	Remove the fraction denominator from the Right side of the equation.	$D = 70 \times \frac{(100 - D)}{60}$ $60D = 70 \times \frac{(100 - D)}{\cancel{60}} \times \cancel{60}$ $60D = 70(100 - D)$
3	Multiply 70 by the parenthesis term on the right side of the equation.	Express the variable term on the right side of the equation so it can be moved to left side.	$60D = 7000 - 70D$
4	Add 70D from both sides of the equation.	Remove the variable targeted for solution from the left side of the equation.	$70D + 60D = 7000 - 70D + 70D$ $130D = 7000$
4	Divide both sides of the equation by 130.	Isolate the target variable on the left side of the equation with its value on the right side.	$\frac{130D}{130} = \frac{7000}{130}$ $\frac{\cancel{130}D}{\cancel{130}} = \frac{7000}{130}$ $D = \frac{7000}{130}$ **D = 53.85 miles**

Table 39
Equation Solution Process

This means that Matthew and Leslie will meet **53.85 miles** from Richmond.

© Michael Steven David 2003

Try These!

Practice the above by solving the word problems in Table 40 below.

Problem Number	Equation	Solution
1	A diary wants to mix milk that has a 5% butterfat content with cream that has an 85% butterfat content to get 160 gallons of mixture that has 50% butterfat content. How much milk and cream needs to be added to the mixture. Hint: Assign the following variables: M = Gallons of Milk C = Gallons of Cream	M = 70 Gallons C = 90 Gallons
2	Tommie has earned an 96, 88, 94 and 98 on four tests in Algebra that represent 70% of her course grade. If the final exam is 30% of her grade, what is the lowest grade she can get on it to get an A in the course? a B in the course? Note: 81 to 90 is a B and 91+ is an A.	Exam Grade for an A is $E_A = 84.0$ Exam Grade for a B is $E_B = 50.7$
3	You have $300 to spend and would like to buy as many music CDs, DVDs as possible and take a date to a Jimmie Buffet concert which costs $75 a ticket. If CDs cost $15 each and DVDs cost $20 each and you buy twice as many CDs as DVDs, how many of each can you buy if you go to the concert? if you don't go to the concert? Note: CDs cost $15 each and DVDs cost $20 each Hint: Assign the following variables: C = Number of CDs D = Number of DVDs	With Concert: C = 6 D = 3 Without Concert: C = 12 D = 6
4	Aerofun Flight 421 flies 600 miles from Richmond, VA to Huntsville, AL with a head wind in 2 hours. The return Flight 653 to Richmond travels at the same air speed but in still air in 1 hour and 30 minutes. What is the speed of the head wind for Flight 421? Note: A head wind blows against the flight direction. Hint: Travel Time = $\frac{\text{Distance}}{\text{Speed}}$ Assign the following variables: P = Airplane Speed H = Head Wind Speed	H = 100 mph

Table 40
Word Problems Practice Exercises

Problem solution details are in Tables 51a and 51b on pages 36 and 37.

© Michael Steven David 2003

Business Math

- ### Working with Percentages

A **Percentage** is an expression that defines how much one thing is of another. Percentages are used with things like:

- Achievement Averages
- Pay Increases
- Price Margins
- Discounts
- Bonuses
- Reliability
- Tax Rates
- Restaurant Meal Tips
- Income Disbursement

The following formula will determine a percentage:

$$\textbf{Percent of Part} = \frac{\textbf{Value of Part}}{\textbf{Amount of Whole}} \textbf{ x 100}$$

This fractional computation will result in a decimal value which is multiplied by 100 to properly express the percent.

An example would be to find the percent of foul shots a basketball player makes if he makes 522 shots out of 580 taken.

$$\text{Percent Made} = \frac{\text{Shots Made}}{\text{Shots Taken}} \text{ x } 100$$

$$\text{Percent Made} = \frac{522}{580} \text{ x } 100 = .90 \text{ x } 100 = 90\%$$

Another example would be to find the percent of money spent on groceries for a month if $585 out of an income of $2,600 was spent on groceries.

$$\text{Percent Spent} = \frac{\text{Amount Spent}}{\text{Month's Income}} \text{ x } 100$$

$$\text{Percent Spent} = \frac{585}{2600} \text{ x } 100 = .225 \text{ x } 100 = 22.5\%$$

The following formula, which is derived from the first percentage formula above, determines the amount a part is of a whole when its percentage is given.

$$\textbf{Value of Part} = \frac{\textbf{Percent of Part}}{\textbf{100}} \textbf{ x (Amount of Whole)}$$

An example would be to find how much a 20% tip would be for a $30.00 check at a restaurant.

$$\text{Tip} = \frac{20}{100} \text{ x } (\$30.00)$$

$$\text{Tip} = .20 \text{ x } (\$30.00) = \$6.00$$

© Michael Steven David 2003

Another example would be to find how much a 4.5% local sales tax would be for a refrigerator that costs $995.00.

$$\text{Sales Tax} = \frac{4.5}{100} \text{ x } (\$995.00)$$

$$\text{Sales Tax} = .045 \text{ x } (\$995.00) = \$44.78$$

Try These!

Practice the above by solving the problems in Table 41 below.

Problem Number	Equation	Solution
1	What percent is 38 of 461?	8.24%
2	What percent success does a songwriter have is 87 of his 1,562 are published and recorded?	5.57%
3	How many children pass the Standards of Learning tests if 85.22% pass out of 327,600?	279,180.7 or 279,181
4	How much would an annual salary of $42,650 increase if its recipient got a 3.1% raise?	$1,322.15

Table 41
Percentages Practice Exercises

- ## Determining Averages

An **Average** is a statistical value that is known as the **Arithmetic Mean** or **Simple Average** of a group of numbers. It is calculated by **adding** all the numbers in the **group together** and **dividing** the result by the **quantity of numbers** in the group.

An example would be to determine the average number of hamburgers eaten by each person at the family Memorial Day cookout shown in Table 42 below.

Family Member	Hamburgers Eaten
Mom	2
Dad	3
Danielle	2
Tommie Jo	1
Uncle Matthew	3
Aunt Leslie	2
Grandma	1
Grandpa	2

Table 42
Hamburger Consumption Review

Total Hamburgers Eaten = 2 + 3 + 2 + 1 + 3 + 2 + 1 + 2 = 16

Number of Family Members = 8

$$\frac{16}{8}$$

© Michael Steven David 2003

Average Hamburger Eaten per Family Member = = 2

Another example would be to determine the average candy dollar sales of each Charity Committee member shown in Table 43 below.

Family Member	Candy Sales $
Bob Caramel	$120
Sue Chocolate	$170
Mary Goober	$230
Linda Zagnutt	$100
Bill Snicker	$310
Jack Brachs	$130
Jim Stouffer	$170
Joe Godiva	$260
Sue Fanfarmer	$300
Lesley Heath	$250

Table 43
Hamburger Consumption Review

Total Candy Sales = $120+$170+$230+$100
+$310+$130+$170+$260+$300+$250

Total Candy Sales = $2,040

Number of Committee Members = 10

$$\text{Average Sales per Committee Member} = \frac{\$2{,}040}{10} = \$204$$

Each number in a **Simple Average** contributes equally to its value. In another type of average, known as a **Weighted Average**, each number contributes a specified percentage to the average. A **Weighted Average** is calculated by **multiplying** the **decimal value** of each number's **percent contribution** times itself for each number and then **adding** all the multiplied results together.

> The percents of a **Weighted Average** must total 100% since they represent all the contributing parts of the average.

An example of this would be to determine the average speed on a trip if the times spent at the different speeds are those in Table 44.

mph Speed	Minutes at Speed	% of Total Time
65	90	37.5%
70	90	37.5%
40	30	12.5%
25	30	12.5%

Table 44
Trip Speeds and Times

Note: **% of Total** was determined by dividing the total time into the time at each speed.

© Michael Steven David 2003

Average Speed = (65)(.375) + (70)(.375) + (40)(.125) + (25)(.125)

Average Speed = 24.375 + 26.250 + 5.000 + 3.125 = 58.750 mph

Another example would be to determine the average age of the children in an elementary school if the age and number of students in each grade are those shown in Table 45 below.

Grade	Student Age In Years	Number of Students	% Students in a Grade
1st	6	300	18.75%
2nd	7	350	21.88%
3rd	8	250	15.63%
4th	9	300	18.75%
5th	10	400	25.00%

Table 45
Students and Ages

Note: **% of Students in a Grade** was determined by dividing the total number of students into those in each grade.

Average Age = (6)(.1875) + (7)(.2188) + (8)(.1563) + (9)(.1875) + (10)(.2500)

Average Age = 1.125 + 1.531 + 1.250 + 1.688 + 2.500 = 8.094 years

Try These!

Practice the above by solving the problems in Table 46 below.

Problem Number	Equation	Solution
1	What percent is 38 of 461?	8.24%
2	What percent success does a songwriter have is 87 of his 1,562 are published and recorded?	5.57%
3	How many children pass the Standards of Learning tests if 85.22% pass out of 327,600?	279,180.7 or 279,181
4	How much would an annual salary of $42,650 increase if its recipient got a 3.1% raise?	$1,322.15
5	What is the student's final grade average if she earned the following grades which have the weights in the final grade shown below? Item / Weight % / Grade Homework / 30% / 85 Quizzes / 10% / 95 Midterm Exam / 20% / 90 Final Exam / 40% / 95	Final Grade = 91

Table 46
Averages Practice Exercises

© Michael Steven David 2003

- ## Adding Sales Tax

Sales Tax is defined as a fixed percentage that is added to an **Item Price**. One way to do this is to **multiply** the decimal value of the **Sales Tax Percentage** times the **Item Price** and then add the result to the **Item Price** to get the **Total Price**.

An example of this would be to add a 6.2% Sales Tax to a DVD player that cost $125.00.

Sales Tax = (.062) x ($125.00) = 7.75

Total Price = Sales Tax + Item Price

Total Price = $7.75 + $125.00 = $132.75

An **easier way** to add **Sales Tax** is to just **add 1** to the **decimal value** of the **Sales Tax Percent** and **multiply** the result times the **Item Price**.

The above example would be solved with this method as follows:

Total Price = (1.00 + .062) x ($125.00)

Total Price = (1.062) x ($125.00) = $132.75

Try These!

Practice the above by solving the problems in Table 47 below.

Problem Number	Equation	Solution
1	Add 10.3% Sales Tax to a $550 purchase.	Total Price = $606.65
2	Add 8.5% Sales Tax to a $320 purchase.	Total Price = $347.20
3	Add 3.7% Sales Tax to a $960 purchase.	Total Price = $995.52

Table 47
Adding Sales Tax Practice Exercises

- ## Calculating a Commission

Sales people can earn more as their sales increase when they are given a **Commission** that pays them a **percent of their total sales**. The amount of this **Commission** is determined the same way a **Sales Tax** is calculated. Just **multiply** the **decimal value** of the **Commission Percentage** times the **Total Sales**.

An example of this would be to determine the pay for an auto salesman who gets an 18% commission on $155,720 sales.

Commission Pay = (.18) x ($155,720) = $28,029.60

© Michael Steven David 2003

Try These!

Practice the above by solving the problems in Table 48 below.

Problem Number	Equation	Solution
1	Determine the amount of pay from a 25% commission applied to $20,000 worth of sales.	$5,000
2	Determine the amount of pay from a 15% commission applied to $9,480 worth of sales.	$1,422
3	Determine the amount of pay from a 6% commission applied to $350,250 worth of sales.	$21,015

Table 48
Commission Practice Exercises

- ## Calculating a Bonus

Sales people are can also earn more from a **Bonus** if their sales exceed a specified target amount. Like a **Commission,** a **Bonus** pays them a **percent of their sales.** But it is the **sales over a specified amount**; not **Total Sales**.

The amount of a **Bonus** is determined like a **Sales Tax** or **Commission** is calculated with one small adjustment. The **decimal value** of the **Bonus Percentage** is **multiplied** by the **difference** between the **Total Sales and the specified amount**.

An example of this would be to determine the bonus for a real estate salesperson, who gets a 8% monthly bonus for all sales over $200,000 sales, for June sales of $356,425.

June Bonus = (.08) x ($356,425 - $200,000)

June Bonus = (.08) x ($156,425) = $12,514

Try These!

Practice the above by solving the problems in Table 49 below.

Problem Number	Equation	Solution
1	Determine the bonus pay for $5,680 sales if a 20% bonus is paid for sales over $4,000.	$336.00
2	Determine the bonus pay for $10,825 sales if a 15% bonus is paid for sales over $6,000.	$723.75
3	Determine the bonus pay for $187,955 sales if a 9% bonus is paid for sales over $150,000.	$3,415.95

Table 49
Bonus Practice Exercises

© Michael Steven David 2003

- ## Profit Margins and Discounts

The marketplace offers a variety of pricing schemes to attract customers. **Sales Prices** are influenced by internal operating cost and competition.

Since a business must show a **profit** to survive, its prices should cover the expenses it incurs (wholesale purchase price, building operating cost, labor cost, utilities, management salaries, etc.) to offer products for sale and the profit. This done by adding a **percent**, known as the **Profit Margin**, to the **wholesale price** paid for an item to get the item **Sales Price**.

Determining an item **Sales Price** is done the same way as adding a **Sales Tax**. One way to do this is to **multiply** the decimal value of the **Profit Margin Percentage**, which is based on the desired profitability and competitive adjustments, times the **Item Wholesale Price** and then **add** the result to the **Item Wholesale Price** to get the **Sales Price**.

An example of this would be to add a 10% Profit Margin to shoes that have a Wholesale Price of $40.00.

Profit Margin = (.10) x ($40.00) = 4.00

Sales Price = Wholesale Price + Profit Margin

Sales Price = $40.00 + $4.00 = $44.00

An **easier way** to determine a **Sales Price** is to just **add 1** to the **decimal value** of the **Profit Margin Percent** and **multiply** the result times the **Item Wholesale Price**.

The above example would be solved with this method as follows:

Total Price = (1.00 + .10) x ($40.00) = $44.00

Total Price = (1. 10) x ($40.00) = $44.00

Once the **Profit Margin** has been added, the **Sales Price** may need to be adjusted down to attract customers away from the competition. This is done by **Discounting** the price for a special sale like on Memorial Day or July 4th.

Determining an item **Discounted Sales Price** is similar to adding a **Profit Margin**. Here the **percent** is **subtracted** instead.

One way to do this is to **multiply** the **decimal value** of the **Discount Percentage** times the **Item Sales Price** and then **subtract** the result to the **Item Sales Price**.

An example of this would be to discount a $300 item 25%.

Discount Amount = (.25) x ($300.00) = $75.00

Discounted Sales Price = Item Sales Price – Discount Amount

Discounted Sales Price = $300.00 + $75.00 = $225.00

© Michael Steven David 2003

An **easier way** to determine a **Discounted Sales Price** is to just **subtract** the **decimal value** of the **Discount Percent** from **1** and **multiply** the result times the **Sales Price**.

The above example would be solved with this method as follows:

Discounted Sales Price = (1.00 – .25) x ($300.00)

Discounted Sales Price = (.75) x ($300.00) = $225.00

Try These!

Practice the above by solving the word problems in Table 50 below.

Problem Number	Equation	Solution
1	Determine the Sales Price of a car if its Wholesale Price is $25,000 and Profit Margin is 15%.	$28,750.00
2	Determine the Sales Price of a living room suite if its Wholesale Price is $875 and Profit Margin is 125%.	$1,968.75
3	Determine the Sales Price of a diamond ring if its Wholesale Price is $2,850 and Profit Margin is 145%.	$6,982.50
4	Determine the Discounted Sales Price of a boat if its Sales Price is $35,000 and the Discount is 10%.	$31,500
5	Determine the Discounted Sales Price of a house if its Sales Price is $194,700 and the Discount is 25%.	$146,025
6	Determine the Discounted Sales Price of a refrigerator if its Sales Price is $1,250 and the Discount is 40%.	$750

Table 50
Profit Margin and Discount Practice Exercises

© Michael Steven David 2003

Word Problems Solution Detail:

Problem Number	Solution Explanation	Solution
1	Assign the following variables: M = Gallons of Milk C = Gallons of Cream Relations Equations: 1st Equation: M + C = 160 2nd Equation: .05M + .85C = .50(160) or .05M + .85C = 80 Substitute the 1st Equation M = 160 – C into the 2nd Equation to get .05(160 – C) + .85C = 80 8 - .05C + .85C = 80 .80C = 72 C = 90 Substitute the solution for C into the 1st Equation to get M + 90 = 160 M = 160 - 90 M = 70	M = 70 Gallons C = 90 Gallons
2	Assign the following variables: T = Test Average E = Exam Grade E_A = Exam Grade for an A E_B = Exam Grade for a B Relations Equation: .70T + .30E = Final Grade Determine the average of the 4 grades by summing them and dividing by 4 to get $T = \frac{96+88+94+98}{4}$ $T = \frac{376}{4} = 94$ Substitute the solution for T into the Relations Equation to get .70(94) + .30E = Final Grade .30E = Final Grade - 65.8 $E = \frac{\text{Final Grade - 65.8}}{.30}$ Exam grade for a A: $E_A = \frac{91.0 - 65.8}{.30} = \frac{25.2}{.30}$ $E_A = 84.0$ Exam grade for a B: $E_A = \frac{91.0 - 65.8}{.30} = \frac{15.2}{.30}$ $E_B = 50.7$	Exam Grade for an A is $E_A = 84.0$ Exam Grade for a B is $E_B = 50.7$

Table 51a
Word Problems Practice Exercises Solution Detail

© Michael Steven David 2003

Problem Number	Solution Explanation	Solution
3	Assign the following variables: C = Number of CDs D = Number of DVDs T = Ticket Price Relations Equations: 1st Equation: C = 2D 2nd Equation: 15C + 20D = 300 – 2T With the concert, substitute the 1st Equation C = 2D and T = 75 into the 2nd Equation to get 15(2D) + 20D = 300 – 2(75) 30D + 20D = 150 50D = 150 D = 3 Substitute the solution for D into the 1st Equation to get C = (2)(3) C = 6 Without the concert, substitute the 1st Equation C = 2D and T = 0 into the 2nd Equation to get 15(2D) + 20D = 300 – 2(0) 30D + 20D = 300 50D = 300 D = 6 Substitute the solution for D into the 1st Equation to get C = (2)(6) C = 12	With Concert: C = 6 D = 3 Without Concert: C = 12 D = 6
4	Assign the following variables: P = Airplane Speed H = Head Wind Speed t_R = Time from Richmond to Huntsville = 2.0 hours t_H = Time from Huntsville to Richmond = 1.5 hours Relations Equations: 1st Equation: $t_R = \frac{600}{P - H}$ 2(P – H) = 600 P – H = 300 2nd Equation: $t_H = \frac{600}{P}$ 1.5P = 600 P = 400 Substitute the solution for P into the 1st Equation to get 400 – H = 300 H = 100 mph	H = 100 mph

Table 51b
Word Problems Practice Exercises Solution Detail

© Michael Steven David 2003

References

Beckenbach, Edwin F., Drooyan, Irving, Wooton, William; “College Algebra: Second Edition”; Wadsworth Publishing Company, Inc. 1964, 1968

Freund, John E.; “College Mathematics with Business Applications”; Prentice-Hall, Inc. 1969

Nielsen, Kaj L.; “Mathematics for Practical Use”; Barnes & Noble, Inc. 1962

Sagan, Carl; “Billions and Billions: Thoughts on Life and Death at the Brink of the Millennium”; Random House, 1997

Sagan, Carl; “Contact”; Simon and Schuster, 1985

Sanders, Paul, McEntire, Arnold D.; “Elementary Mathematics: A Logical Approach”: International Textbook Company 1963, 1969

Wallace, George E.; “Elementary Algebra”; MCGraw-Hill Inc. 1969

© Michael Steven David 2003

THIS PAGE INTENTIONALLY LEFT BLANK

© Michael Steven David 2003